STORM TOP

WWW.ROLLOFFCOVERS.COM

MODEL ST-8200-S

Standard Storm-Top Cover

Assembly Instructions

Patent Protected

Visit www.rolloffcovers.com for details.

TB INDUSTRIES INC

Step 1: Center Tube Assembly (x3)

Lie components on a flat surface. Assemble Center Tubes (8201) to the Stub Connector (8202) using (2) 3/8 x 3" bolts and flange nuts at the locations shown.

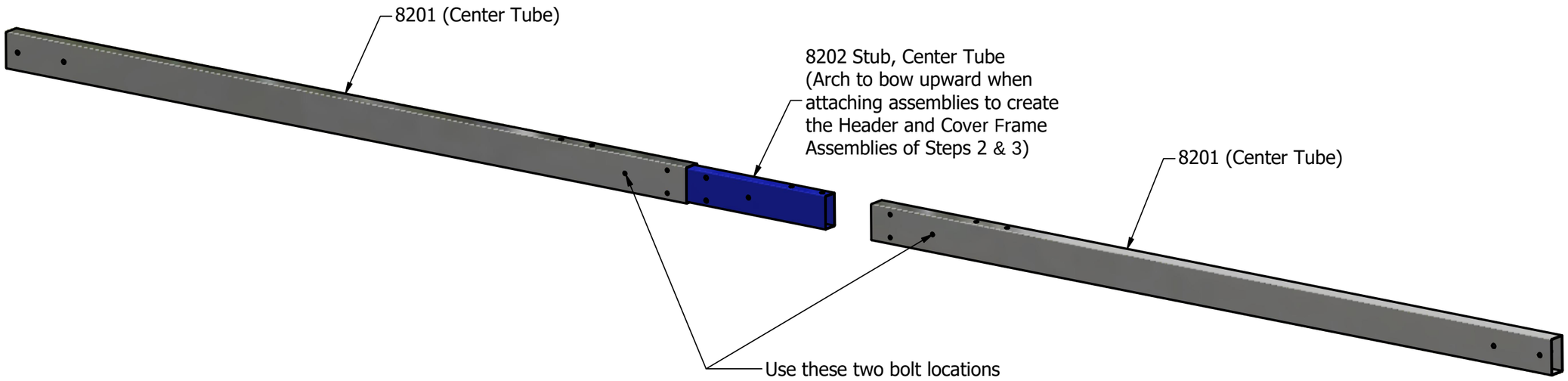

Step 2: Header Tube pre-Assembly

Slide Header End Assemblies within either end of (1) Center Tube Assembly as shown. Do not bolt at this time.

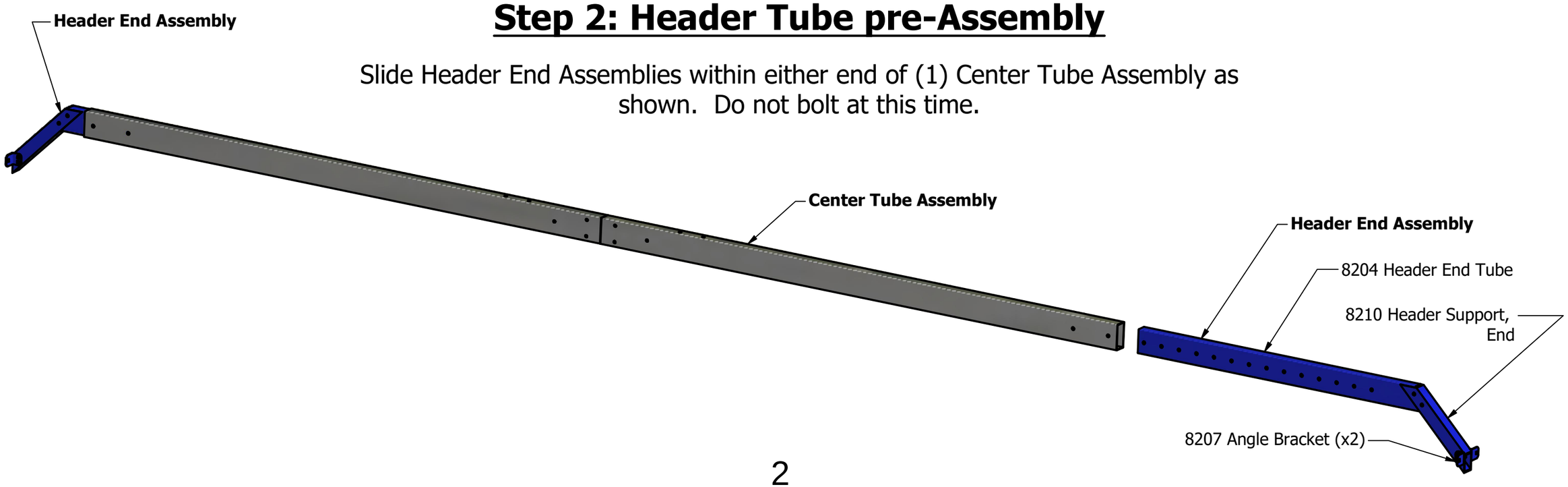

Step 3: Cover Frame Assembly

Measure outside length of the container on which the cover is to be installed. You will want the Cover Frame to be at least this length or longer.

Equally install the End Frame Assemblies into the Center Tube Assemblies as shown. It is acceptable to have one End Frame Assembly extending 3" more than the other in order to reach the length desired. When properly adjusted, the 2 holes at either end of each Center Tube Assembly will closely align with 2 holes of the End Frame Assemblies. Do not bolt at this time.

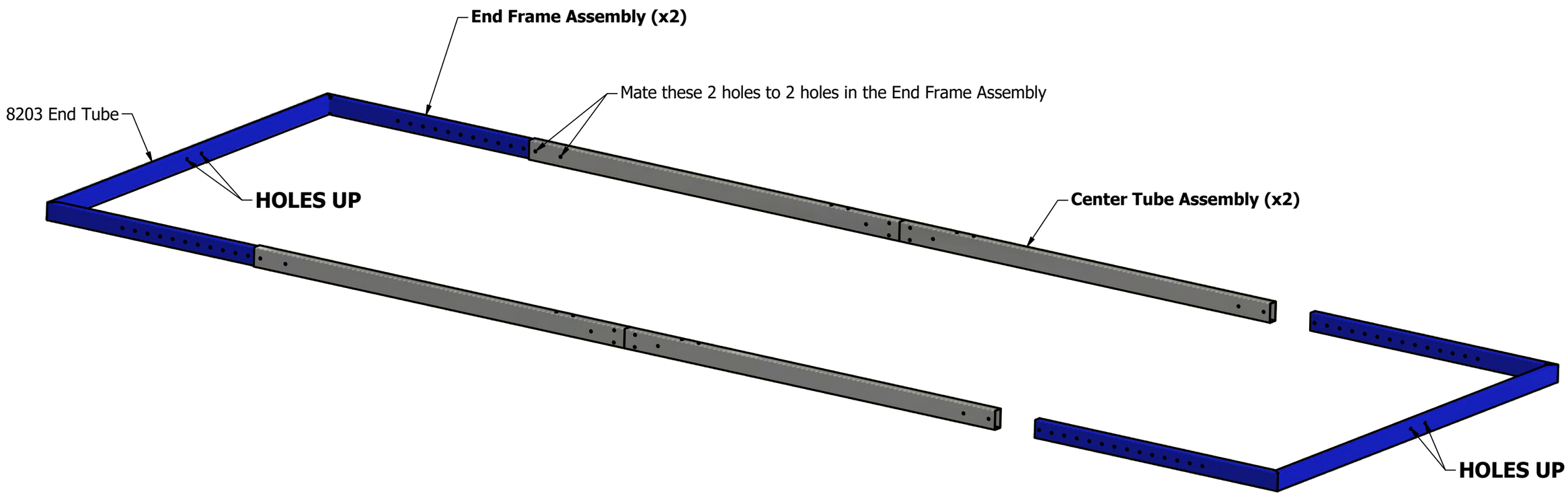

Step 4: Roller and Center Tube Installation

Upon a flat surface with frame adjusted per previous step, bolt the Roller Tubes (8205) with Angle Brackets (8207) to the ends of the Center Tube Assemblies as shown. ***Note orientation (see detail A)*** Use (4) 3/8 x 3" bolts and flange nuts per Roller Tube Assembly, flange nuts to the inside of the frame assembly.

Install Center X-Tube (8214) and Handle Bracket (8102) to the center of the (2) Center Tube Assemblies using (8) 3/8 x 3" bolts and flangenuts, flangenuts to the inside of the frame.
Note: Handle Bracket must coincide with Roller Tube Assembly orientation

See below for bolt locations. Tighten all fasteners.

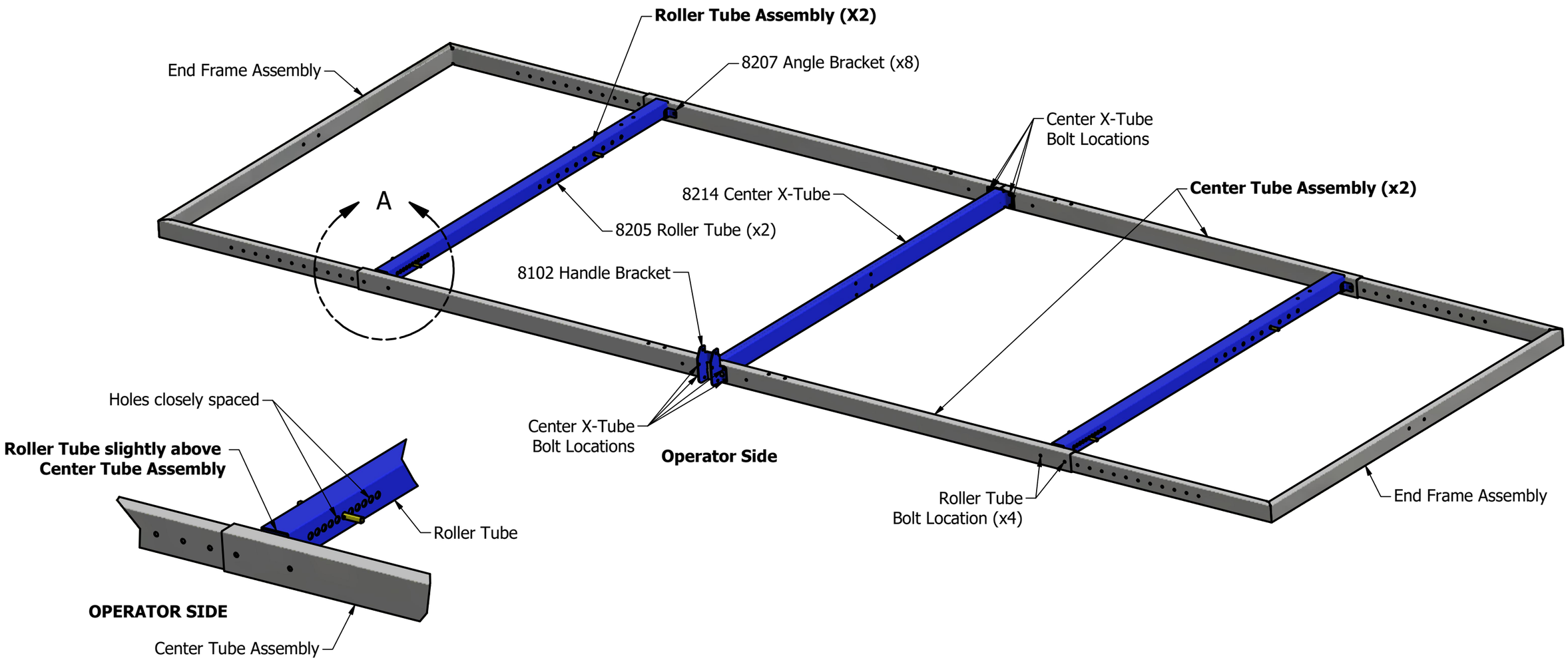

Detail A

Step 5: Header Assembly Installation

Slide the Header End Assemblies out from the Center Header Assembly until they meet the End Tubes. Bolt Header End Assemblies to End Tubes using (2) 3/8 x 3" bolts and flange nuts, and (2) 3/8" eyebolts and flange nuts to the inside of frame as shown below.

Attach one end of the Middle Header Supports (8211) to the Center X-Tube with (4) 3/8 x 3" bolts and flangenuts. Attach upper end of Middle Header Supports to the Header Tube Assembly using (8) 3/8 x 1" bolts.

Bolt Header End Assemblies to Center Header Assembly with (4) 3/8 x 3" bolts and flangenuts.

See below for bolt locations. Tighten all fasteners. **Center Header Assembly bolts must be completely tightened to prevent sag at seam.**

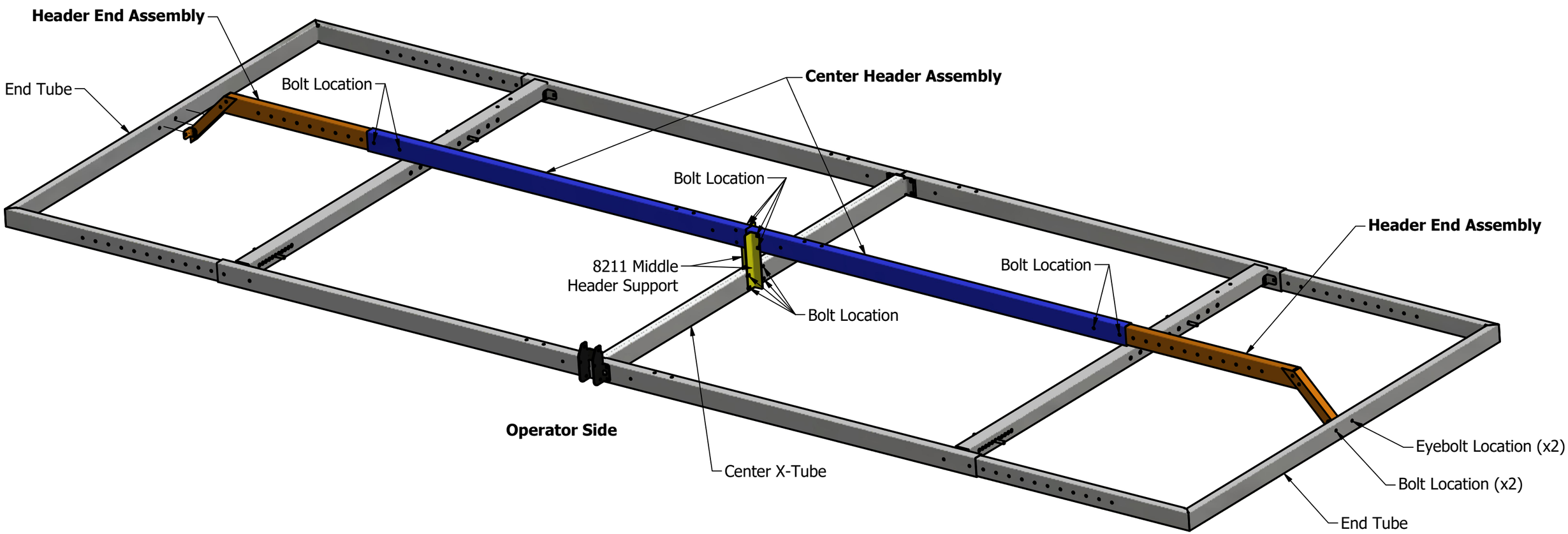

Step 6: Stop Pin Placement

WARNING: STOP PINS MUST BE IN PLACE BEFORE ATTEMPTING TO OPERATE COVER. DO NOT PROCEED UNTIL PINS ARE IN PLACE!

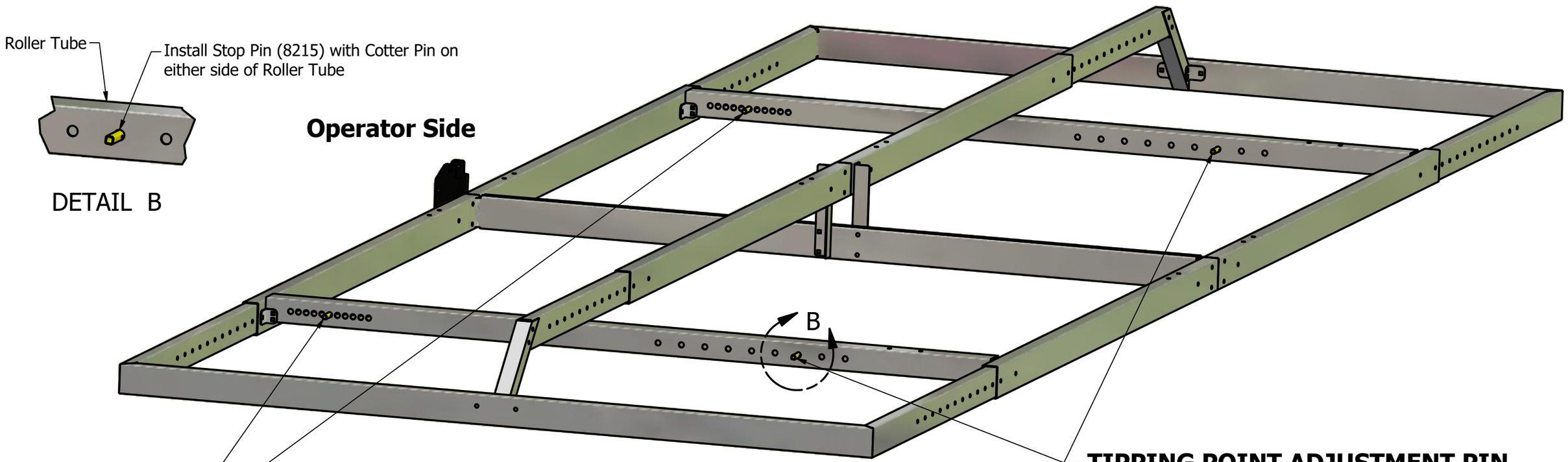

TIPPING POINT ADJUSTMENT PIN
Initial Location: 5th hole from Operator Side

Once cover is assembled to the container, cover tipping force may be altered by relocating this stop pin. Location shown is a starting point and will likely need to be changed in order to suit the particular container the cover is placed upon as well as preference of end user.

COVER CENTERING PIN
Initial Location: 6th Hole from Operator Side

Once cover is on container, this stop pin may need to be relocated to best center cover over the width of the container.

Step 7: Plastic Cover Assembly

Position the Plastic Sections (8001) over the frame (total number of pieces may be less than shown for shorter covers).
***NOTE* THE WIDER END OF EACH SECTION WILL FIT OVER TOP OF THE NARROWER END OF THE NEXT PIECE.**
Due to variations in the plastic molding process, if an interference should occur, place piece to the underside.

Space sections evenly end-to-end and also side-to-side. Notch the plastic to clear the Handle Bracket.

Using the self-drilling screws provided, secure the sections to the top perimeter of the tube frame assembly as required. Space screws approximately 12" apart. Add more where required.

Lastly, secure the plastic sections to the header assembly of the frame (approximately 12" screw spacing).

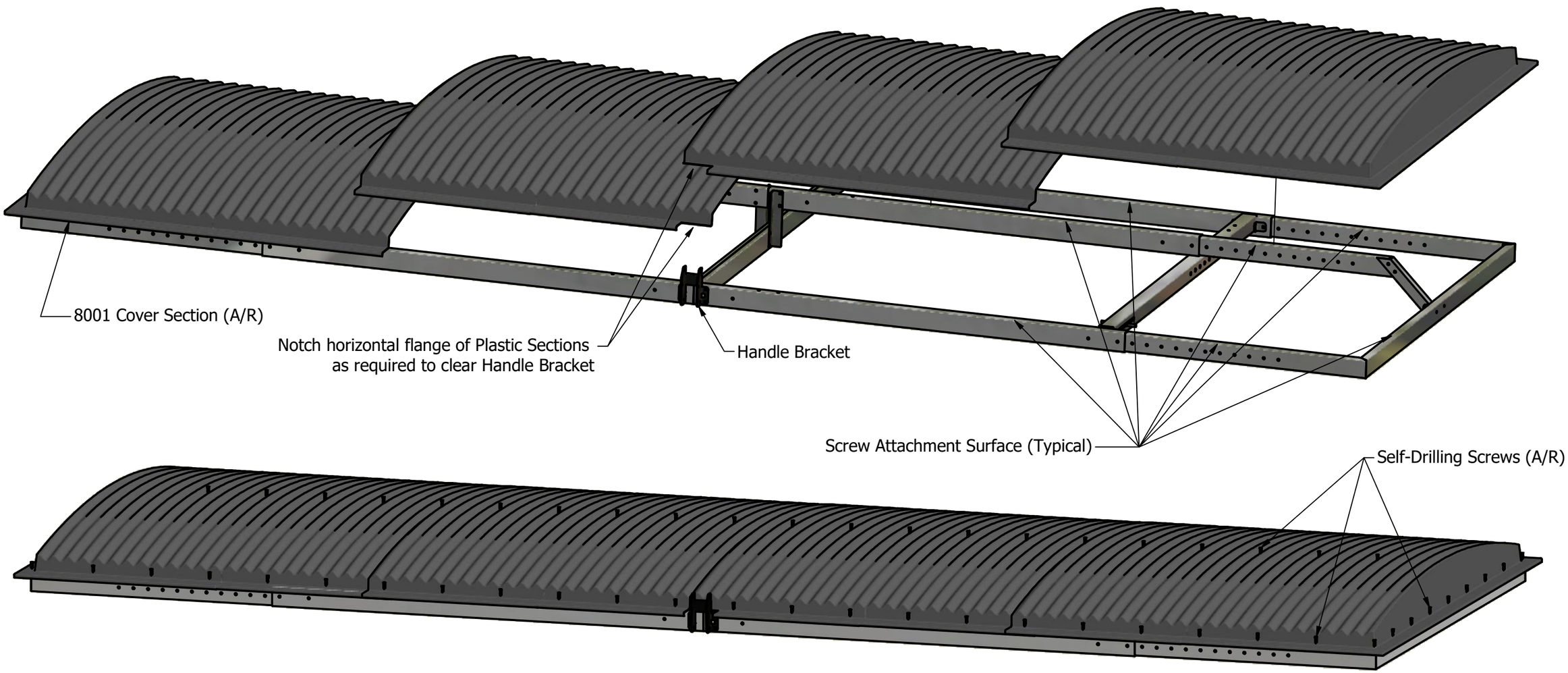

Step 8: Arm Assembly (x2)

Measure the width of the container being covered (the outside of one rail to the inside of the other).

Using (2) 3/8 x 4" bolts and flange nuts, assemble the Rear Arm Assembly to the Arm Tube Assembly. Match the measurement to the container width or next increment smaller. **Note**: On narrow width containers, the (2) 3/8 x 1 1/2" carriage bolts holding the Rear Arm Assembly together will need to be replaced with (2) 3/8 x 4" carriage bolts.

Install a Roller (3102) into the lower hole of the Rear Arm Extension (8111) using a 5/8" pin (8250) and two locking cotter pins. Do not install a Roller into the upper hole at this time.

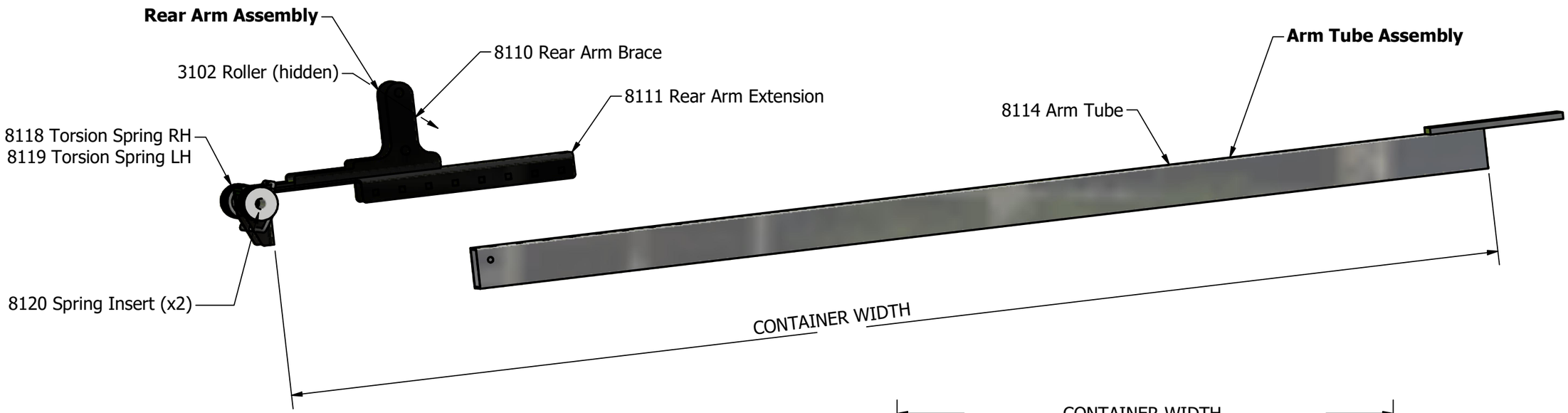

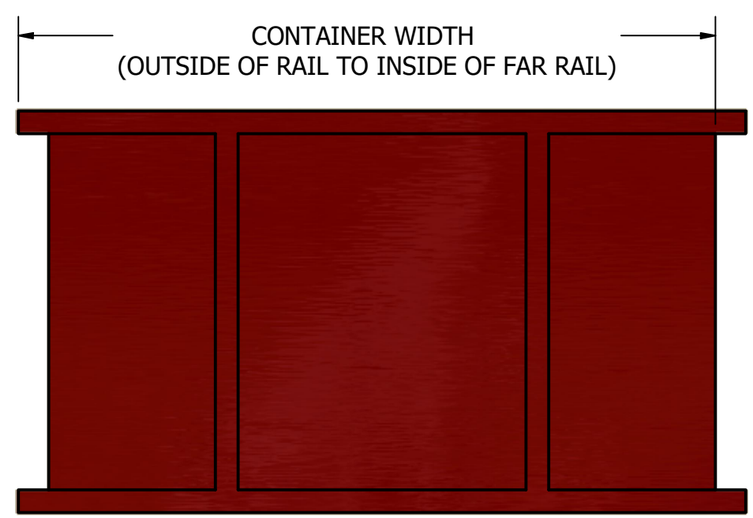

*** DO NOT OVERTIGHTEN ROLLER! ***
ROLLER MUST SPIN FREELY!

Step 9: Roller Retainer Bracket Installation (x2)

Securely elevate the cover and attach the Roller Retainer Bracket (8112) to the Roller Tube as shown using (2) 3/8 x 4" carrigage bolts and flange nuts.

Attach a Roller (3102) into the upper hole of the Roller Retainer Bracket using a 5/8" pin (8250) and locking cotter pins. Do not install a Roller into the lower hole at this time.

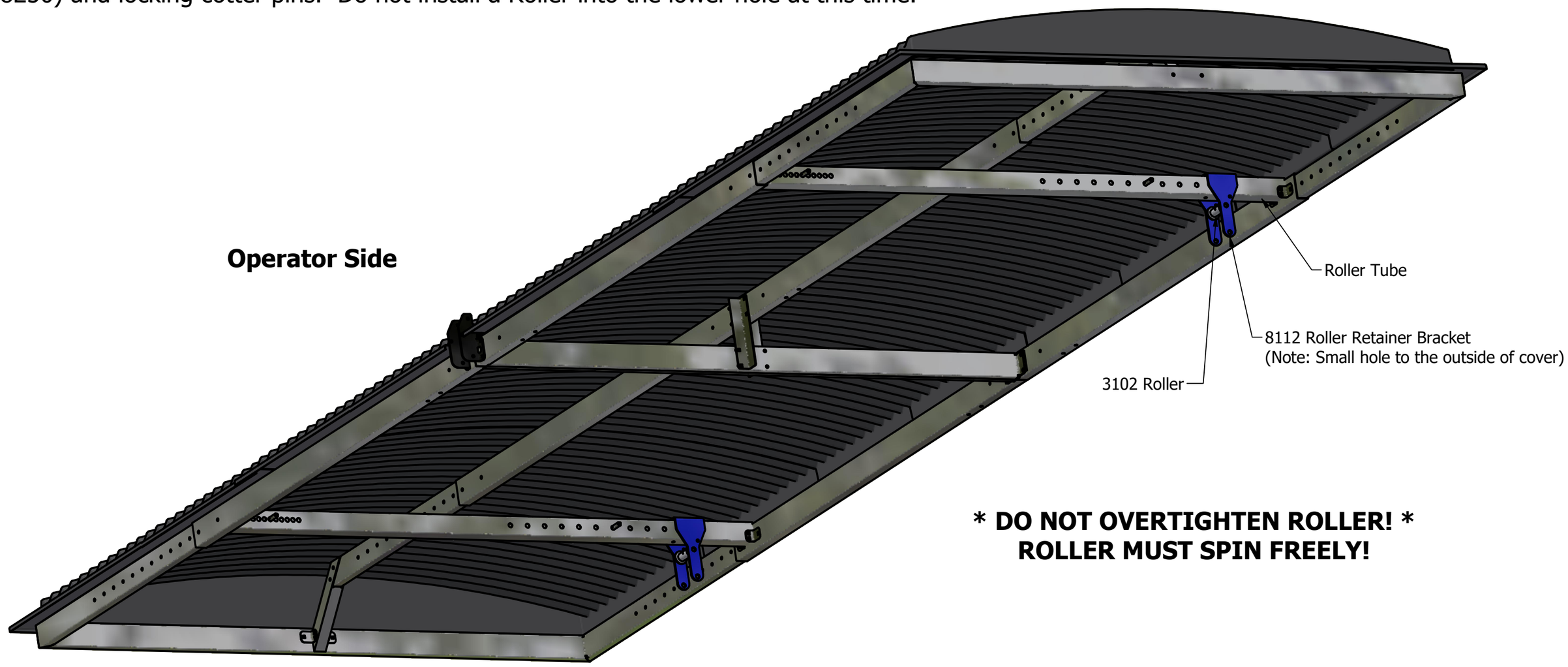

*** DO NOT OVERTIGHTEN ROLLER! ***
ROLLER MUST SPIN FREELY!

Step 10: Arm Assembly Installation (x2)

Lift the Arm Assembly to the Roller Tube until the Rollers previously installed are in contact with the Tubes. Secure Arm Assembly into place with the remaining (2) Rollers (3102), 5/8" pins (8250) and locking cotter pins.

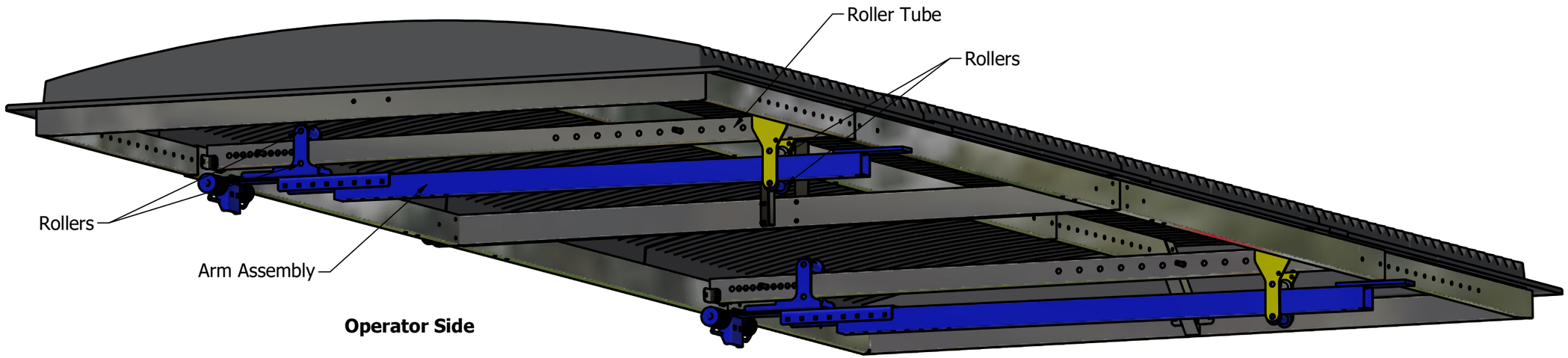

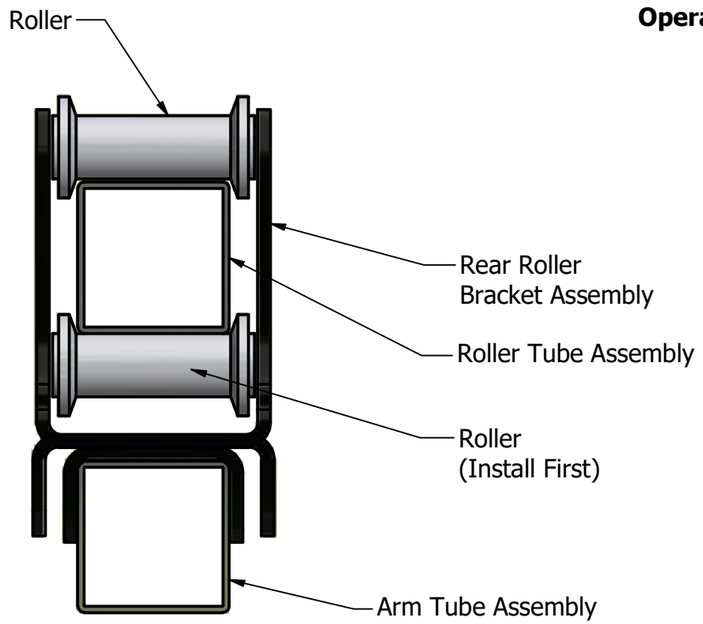

End View Rear Roller Bracket

*** ROLLERS MUST SPIN FREELY ***

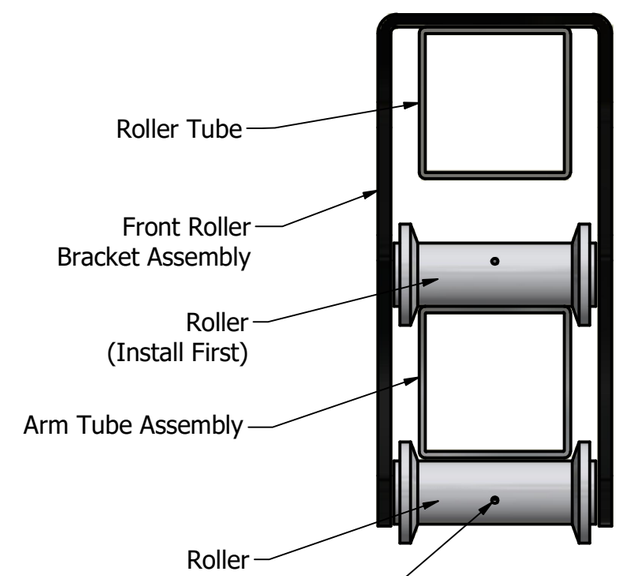

End View Front Roller Bracket

Note: Rollers are drilled to allow for periodic lubrication. Lubricate regularly with a spray of white lithium grease.

Step 11: Warning Label Installation

Place labels and eyebolts as shown.

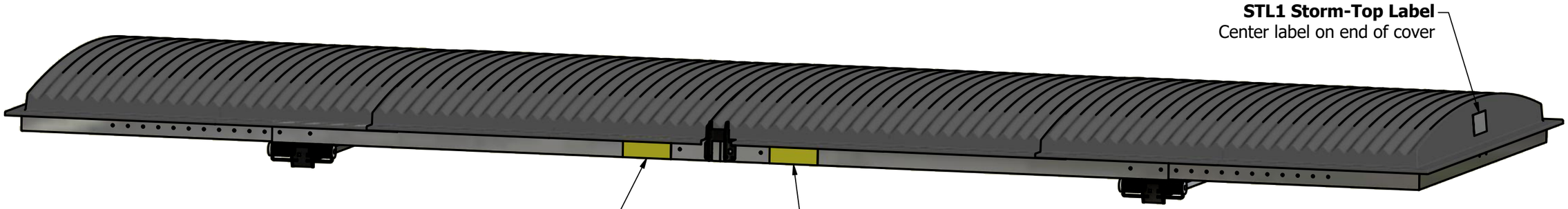

Operator Side

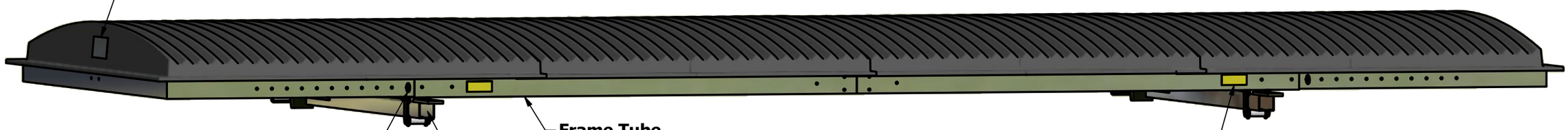

Opposite Operator Side

Step 12: Cover/Container Attachment

Center Cover Assembly on Container, noting direction that is is desired to operate vs. direction container gate swings (typically mounted opposite unless unusual circumstance). Once positioned, Hinge Brackets may be bolted or welded in place.

To bolt, drill (4) 1/2" diameter holes through container rail using holes in Hinge Brackets as a template. Secure hardware in place.

Adjust Stop Pins (see Step 4) to set tipping force required to tilt cover and to set closed position of cover over container.

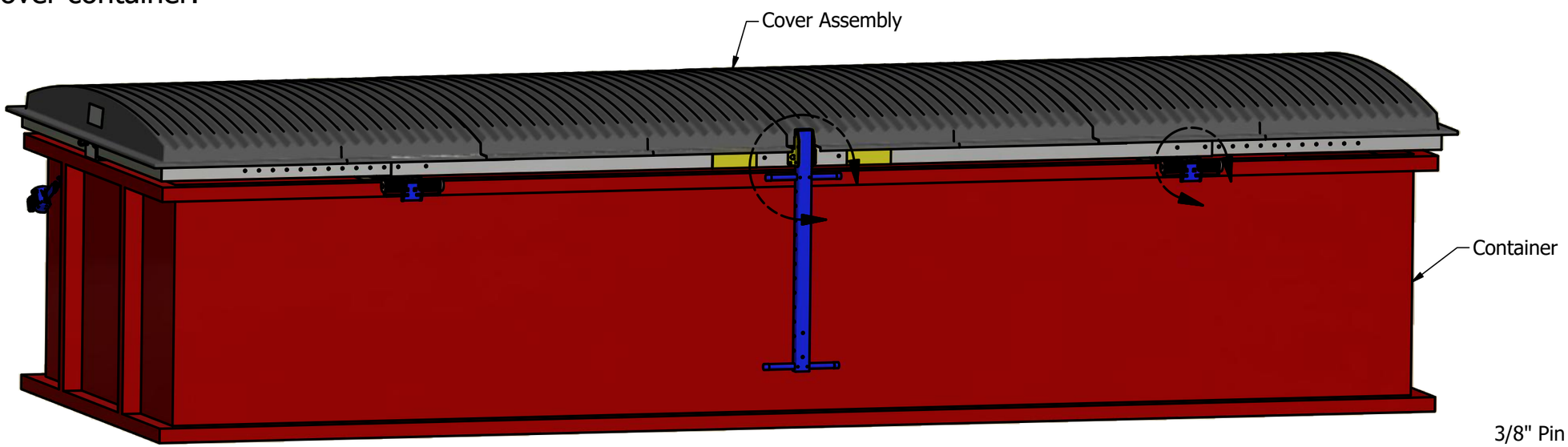

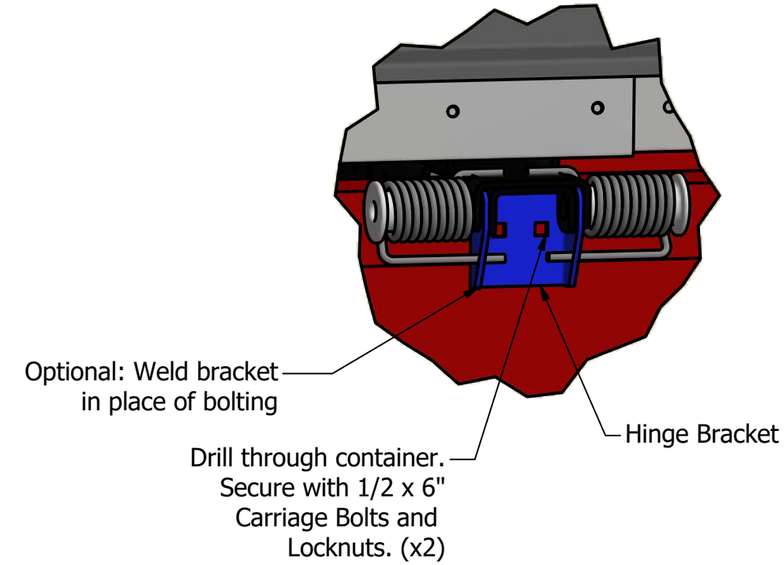

Hinge Detail

Handle Detail

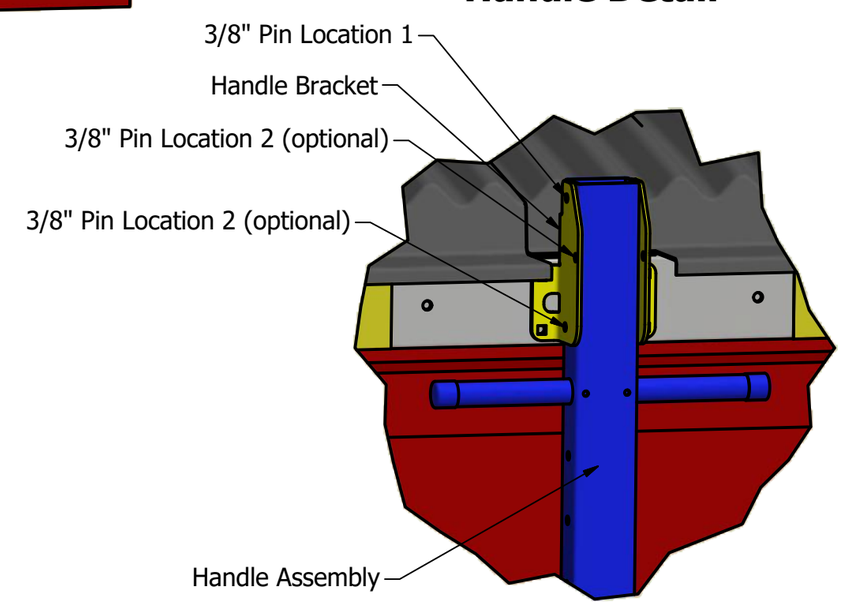

Step 13: Handle Installation

The Handle Assembly may be attached with a single 3/8" Pin Lock through Location 1 of the Handle Bracket and the first hole location of the Handle Assembly. This will allow the Handle Assembly to pivot as the Cover Assembly is operated.

Alternately, at the preference of the operator, the Handle Assembly may be attached in a fixed position through any of its various holes with one 3/8" Pin Lock in Location 1 of the Handle Bracket and a second 3/8" Pin Lock through either of the Handle Bracket locations marked 2 in the Handle Detail.

Step 14: Ratchet Strap Installation

Determine location for the Ratchet Strap Assemblies (8138) on either end of the container, opposite the Operator Side. Select an area that is protected from damage, convenient to operate and will allow the Straps to be hooked to the eyebolts of the Cover Frame without being abraded.

Once positions are established, drill a 3/8" diameter hole in container ends at these locations. Attach the Ratchet Strap Assemblies to the container using 3/8" bolts, flat washers, lock washers and nuts.

Ratchet Strap Assemblies are to aid in securing the Cover Assembly to the Container when not in use and during transport.

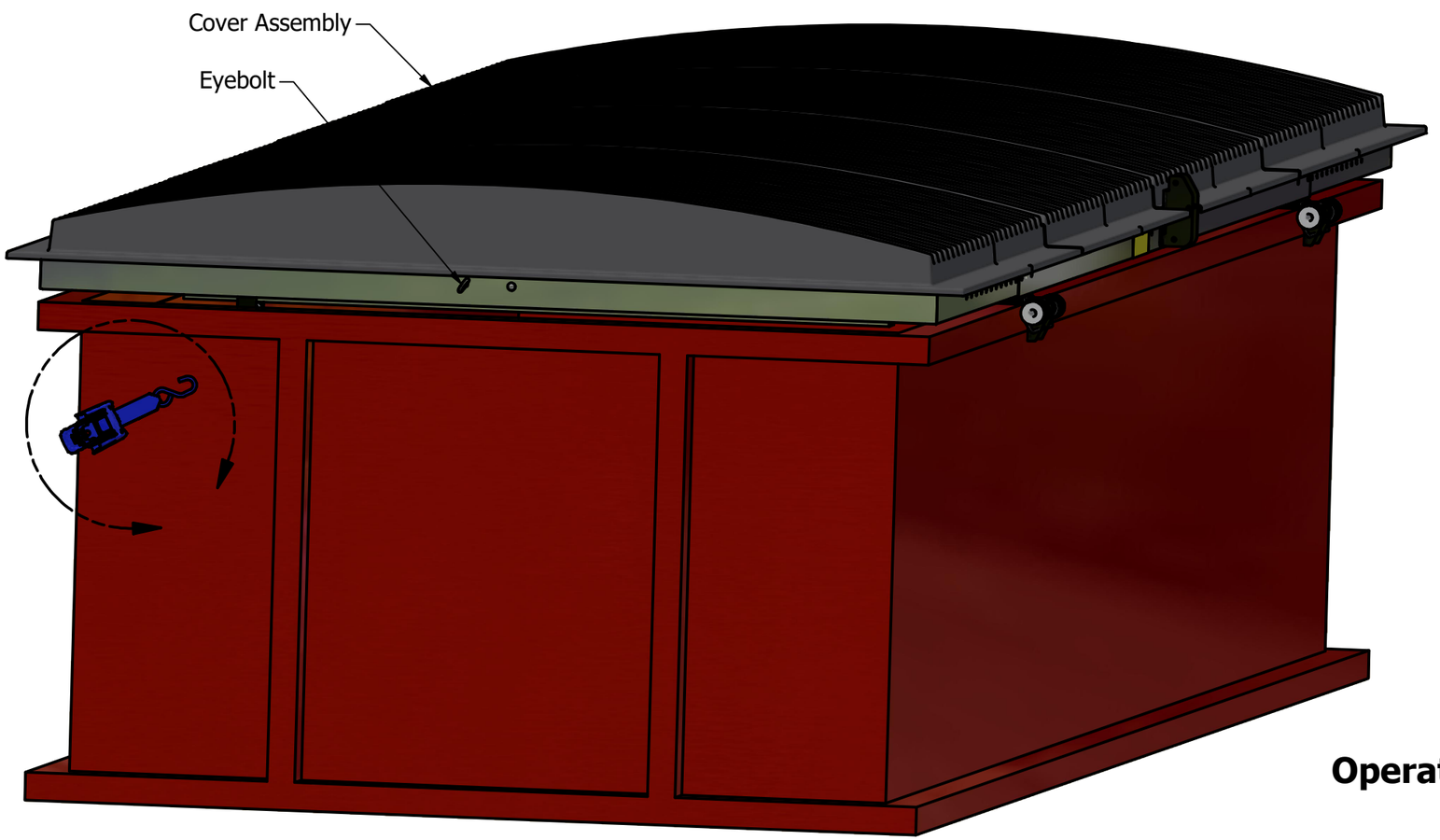

STRAP DETAIL

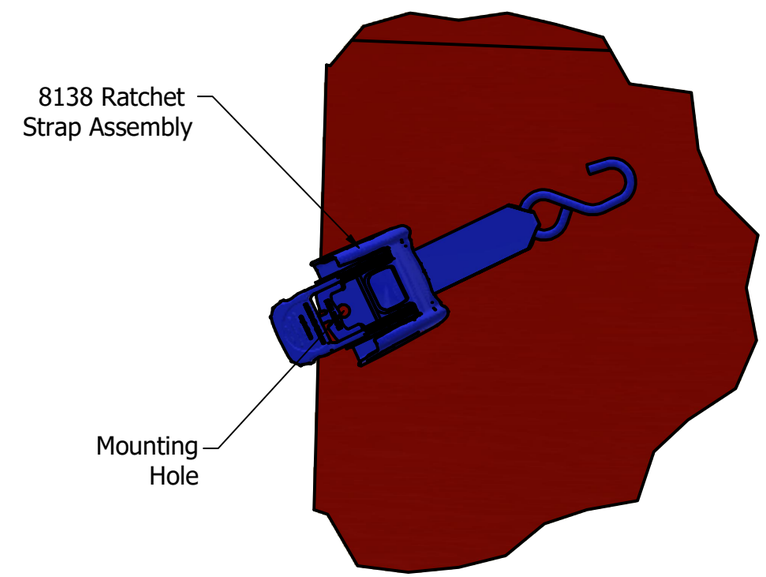

Operator Side

STORM TOP
WWW.ROLLOFFCOVERS.COM

Model ST-8200-S SAFETY CHECKLIST

DO NOT OPERATE STORM-TOP COVER BEFORE REVIEWING

- ○ Make sure all four stop pins are in place in the roller channels (See Step 6 "WARNING" page)
- ○ Lubricate rollers and see that they spin freely
- ○ Make sure all warning labels are in place (See step 11)
- ○ Make sure all nuts/bolts are tightened and securing pins in place

TBI
TB INDUSTRIES INC